AC20B-D to AC60B-D Series Air Filter Regulator Combination



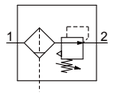

Order Example:
Option/Semi-standard: Select one each for **a** to **i**.
Option/Semi-standard symbol:
When more than one specification is required, indicate in alphanumeric order.
Example) AC30B-F03DE1-16NR-D

Ordering Code

AC20B-D to AC60B-D Series Air Filter Regulator Combination

AC30 B - □ 03 DE - □ - □ - D
① ② ③ ④ ⑤ ⑥

		Symbol	Description	① Body size 20	30	40	50	60
②	Pipe thread type	Nil	Rc	●	●	●	●	●
		N[*1)]	NPT	●	●	●	●	●
		F[*2)]	G	●	●	●	●	●
③	Port size	01	1/8	●	—	—	—	—
		02	1/4	●	●	●	—	—
		03	3/8	—	●	●	—	—
		04	1/2	—	—	●	—	—
		06	3/4	—	—	●	●	—
		10	1	—	—	—	●	●
④ Option	a Float type auto drain	Nil	Without auto drain	●	●	●	●	●
		C[*3)]	N.C. (Normally closed) Drain port is closed when pressure is not applied.	●	●	●	●	●
		D[*4)]	N.O. (Normally open) Drain port is open when pressure is not applied.	—	●	●	●	●
	b Pressure gauge[*5)]	Nil	Without pressure gauge	●	●	●	●	●
		E	Square embedded type pressure gauge (with limit indicator)	●	●	●	●	●
		G	Round type pressure gauge (with limit indicator)	●	●	●	●	●
		M	Round type pressure gauge (with color zone)	●	●	●	●	●
	b Digital pressure switch	E1	Output: NPN output, Electrical entry: Wiring bottom entry	●	●	●	●	●
		E2	Output: NPN output, Electrical entry: Wiring top entry	●	●	●	●	●
		E3	Output: PNP output, Electrical entry: Wiring bottom entry	●	●	●	●	●
		E4	Output: PNP output, Electrical entry: Wiring top entry	●	●	●	●	●
⑤ Attachment	c Pressure relief 3-port valve	Nil	Without attachment	●	●	●	●	●
		V	Mounting position: AF + AR + V	●	●	●	●	—
		V1[*6)]	Mounting position: V + AF + AR□K	●	●	●	●	—
⑥ Semi-standard	d Set pressure[*7)]	Nil	0.05 to 0.85 MPa setting	●	●	●	●	●
		1	0.02 to 0.2 MPa setting	●	●	●	●	●
	e Bowl	Nil	Polycarbonate bowl	●	●	●	●	●
		2	Metal bowl	●	●	●	●	●
		6	Nylon bowl	●	●	●	●	●
		8	Metal bowl with level gauge	—	●	●	●	●
		C	With bowl guard	●	—[*8)]	—[*8)]	—[*8)]	—[*8)]
		6C	With bowl guard (Nylon bowl)	●	—[*9)]	—[*9)]	—[*9)]	—[*9)]
	f Air filter drain port[*10)]	Nil	With drain cock	●	●	●	●	●
		J[*11)]	Drain guide 1/8	●	—	—	—	—
			Drain guide 1/4	—	●	●	●	●
		W[*12)]	Drain cock with barb fitting (for Φ6×Φ4 nylon tube)	—	●	●	●	●
	g Exhaust mechanism	Nil	Relieving type	●	●	●	●	●
		N	Non-relieving type	●	●	●	●	●
	h Flow direction	Nil	Flow direction: Left to right	●	●	●	●	●
		R	Flow direction: Right to left	●	●	●	●	●
	i Unit	Nil	Unit on product label: MPa, °C, Pressure gauge in SI units: MPa	●	●	●	●	●
		Z[*13)]	Unit on product label: psi, °F, Pressure gauge: MPa/psi dual scale	○[*15)]	○[*15)]	○[*15)]	○[*15)]	○[*15)]
		ZA[*14)]	Digital pressure switch: With unit selection function	△[*16)]	△[*16)]	△[*16)]	△[*16)]	△[*16)]

VPC PNEUMATIC®
IS09001 CE

AC20B-D to AC60B-D Series Air Filter Regulator Combination

*1) Drain guide is NPT1/8 (applicable to the AC20B-D) and NPT1/4 (applicable to the AC30B-D to AC60B-D). The auto drain port comes with a Φ3/8" One-touch fitting (applicable to the AC30B-D to AC60B-D).
*2) Drain guide is G1/8 (applicable to the AC20B-D) and G1/4 (applicable to the AC30B-D to AC60B-D).
*3) When pressure is not applied, condensate which does not start the auto drain mechanism will be left in the bowl. Releasing the residual condensate before ending operations for the day is recommended.
*4) If the compressor is small [0.75 kW, discharge flow is less than 100 L/min (ANR)], air leakage from the drain cock may occur during the start of operations. N.C. type is recommended.
*5) When the pressure gauge is attached, a 1.0 MPa pressure gauge will be fitted for standard (0.85 MPa) type. 0.4 MPa pressure gauge for 0.2 MPa type.
*6) The regulator is equipped with a backflow function in this configuration. Additionally, when performing maintenance work, make sure that the outlet pressure is released to atmospheric pressure using a pressure gauge.
*7) Pressure can be set higher than the specification pressure in some cases, but use pressure within the specification range.
*8) A bowl guard is provided as standard equipment (polycarbonate).
*9) A bowl guard is provided as standard equipment (nylon).
*10) The combination of float type auto drain C and D is not available.
*11) Without a valve function.
*12) The combination of metal bowl 2 and 8 is not available.
*13) For the pipe thread type: NPT
Cannot be used with M: Round type pressure gauge (with color zone). Available by request for special. The digital pressure switch will be equipped with the unit selection function, setting to psi initially.
*14) For options: E1, E2, E3, E4
*15) ○:For the pipe thread type: NPT only
*16) △:Select with options: E1, E2, E3, E4.

Specifications

Model		AC20B-D	AC30B-D	AC40B-D	AC40B-06-D	AC50B-D	AC60B-D
Component	Air Filter [AF]	AF20-D	AF30-D	AF40-D	AF40-06-D	AF50-D	AF60-D
	Regulator [AR]	AR20-D	AR30-D	AR40-D	AR40-06-D	AR50-D	AR60-D
Port size		1/8, 1/4	1/4, 3/8	1/4, 3/8, 1/2	3/4	3/4, 1	1
Pressure gauge port size[*1)] [AR]		1/8					
Working medium		Air					
Working temperature[*2)]		-5 to 60°C (No freezing)					
Proof pressure		1.5MPa					
Max. Operating pressure		1.0MPa					
Auto drain minimum operating pressure	N.C. [AF]	0.1MPa	0.15MPa				
	N.O. [AF]	—	0.1MPa				
Set pressure range [AR]		0.05 to 0.85 MPa					
Nominal filtration rating [AF]		5 μm					
Compressed air purity class[*3)]		ISO 8573-1:2010 [6 : 4 : 4][*4)]					
Drain capacity [AF]		8 cm³	25 cm³	45 cm³			
Bowl material [AF]		Polycarbonate					
Bowl guard [AF]		Semi-standard (Steel)	Standard (Polycarbonate)				
Construction [AR]		Relieving type					

*1) Pressure gauge connection threads are not available for F.R.L. unit with a square embedded type pressure gauge or with a digital pressure switch.
*2) -5 to 50°C for the products with the digital pressure switch
*3) The compressed air purity class is indicated based on ISO 8573-1:2010 Compressed air – Part 1: Contaminants and purity classes.
*4) The compressed air quality class on the inlet side is [7 : 4 : 4].

AC20B-D to AC60B-D Series Air Filter Regulator Combination

Main Dimensions

AC20B-D

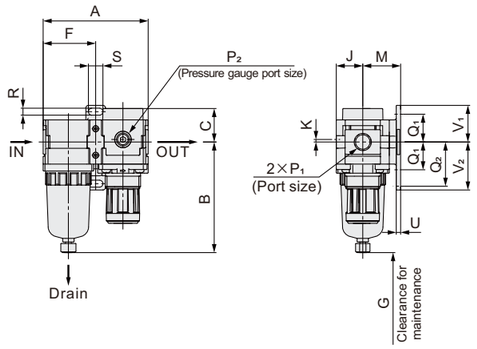

AC30B-D

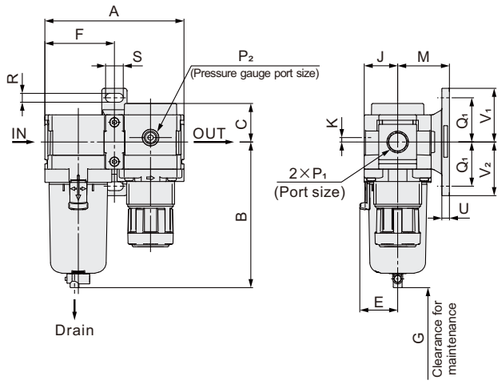

AC40B-D to AC40B-06-D

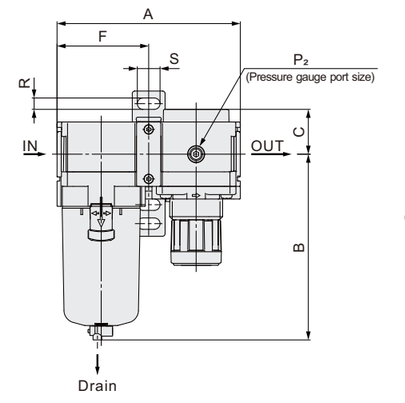

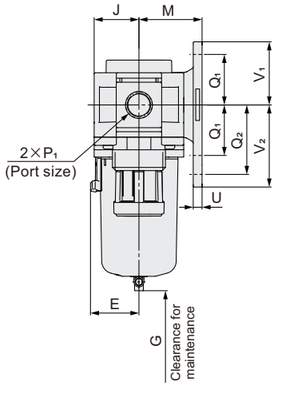

AC50B-D to AC60B-D

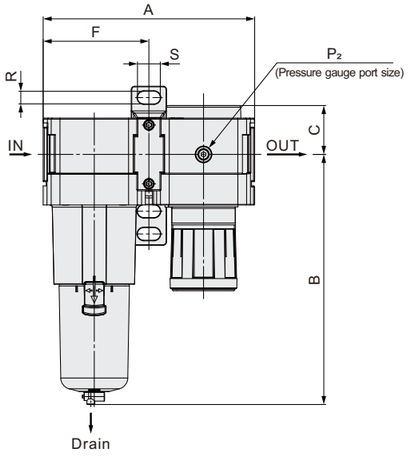

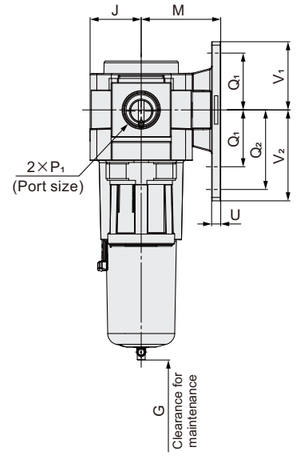

IS09001 CE
VPC PNEUMATIC®
AC20B-D to AC60B-D Series Air Filter Regulator Combination

Main Dimensions

Applicable model	Optional specifications			
	Square embedded type pressure gauge	Digital pressure switch	Round type pressure gauge	Round type pressure gauge (with color zone)
AC20B-D to AC60B-D	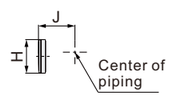	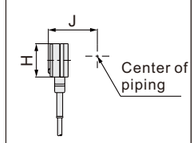	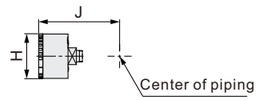	

Applicable model	Optional specifications	Semi-standard					
	With auto drain	PC/PA bowl		Metal bowl		Metal bowl with level gauge	
		Drain cock with barb fitting	With drain guide	With drain cock	With drain guide	With drain cock	With drain guide
AC20B-D	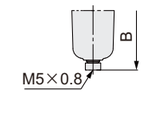		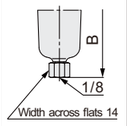	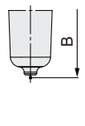	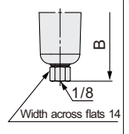		
AC30B-D to AC60B-D	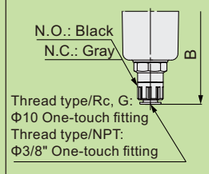	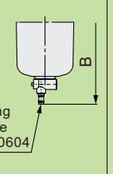	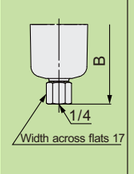	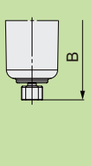	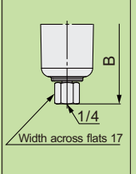	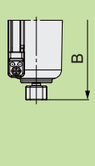	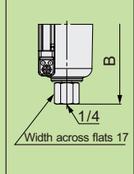

Model	Standard specifications										Bracket mount							
	P₁	P₂	A	B	C	E	F	G	J	K	M	Q₁	Q₂	R	S	U	V₁	V₂
AC20B-D	1/8, 1/4	1/8	83.2	87.6	26.5	—	41.6	25	21	2	30	24	33	5.5	11.5	3.5	29	38
AC30B-D	1/4, 3/8	1/8	110.2	115.4	30.5	30	55.1	35	26.5	3.5	41	35	—	7	14	6	42.5	42.5
AC40B-D	1/4, 3/8, 1/2	1/8	145.2	147.1	35.5	38.4	72.6	40	35.5	—	50	40	55	9	18	7	50	65
AC40B-06-D	3/4	1/8	155.2	149.1	35.5	38.4	77.6	40	35.5	—	50	40	55	9	18	7	50	65
AC50B-D	3/4, 1	1/8	186.2	220.1	43	—	93.1	30	45	—	70	50	70	11	20	8	60	80
AC60B-D	1	1/8	196.2	234.1	45	—	98.1	30	45	—	70	50	70	11	20	8	60	80

Model	Optional specifications											Semi-standard specifications					
	Square embedded type pressure gauge		Digital pressure switch		Round type pressure gauge		Round type pressure gauge (Semi-standard: Z)		Round type pressure gauge (with color zone)		With auto drain	PC/PA bowl		Metal bowl		Metal bowl with level gauge	
												With barb fitting	With drain guide	With drain cock	With drain guide	With drain cock	With drain guide
	H	J	H	J	H	J	H	J	H	J	B	B	B	B	B	B	B
AC20B-D	□28	27	□27.8	37.5	Φ37.5	57.5	Φ37.5	58.5	Φ37.5	58.5	104.9	—	91.4	87.4	93.9	—	—
AC30B-D	□28	32.5	□27.8	43	Φ37.5	63	Φ37.5	64	Φ37.5	64	157.1	123.9	122.2	117.8	122.3	137.8	142.3
AC40B-D	□28	41.5	□27.8	52	Φ42.5	73	Φ42.5	73	Φ42.5	73	186.9	155.6	153.9	149.5	154	169.5	174
AC40B-06-D	□28	41.5	□27.8	52	Φ42.5	73	Φ42.5	73	Φ42.5	73	188.9	157.6	155.9	151.5	156	171.5	176
AC50B-D	□28	51	□27.8	61.5	Φ42.5	82.5	Φ42.5	82.5	Φ42.5	82.5	259.9	228.6	226.9	222.5	227	242.5	247
AC60B-D	□28	51	□27.8	61.5	Φ42.5	82.5	Φ42.5	82.5	Φ42.5	82.5	273.9	242.6	240.9	236.5	241	256.5	261

AC20B-D to AC60B-D Series Air Filter Regulator Combination

Main Dimensions With Pressure Relief 3-Port Valve (V)

AC20B-V-D

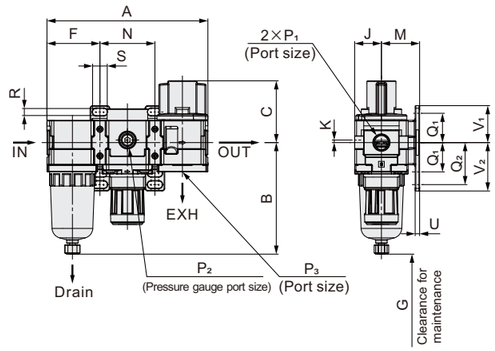

AC30B-V-D

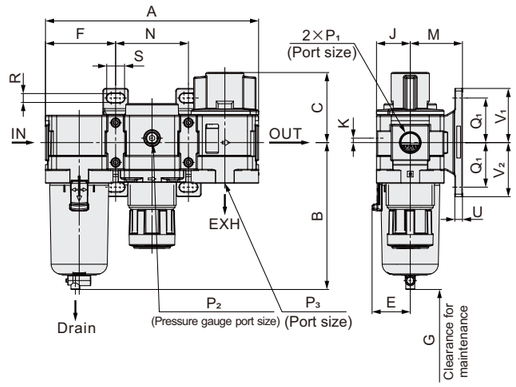

AC40B-V-D to AC40B-06-V-D

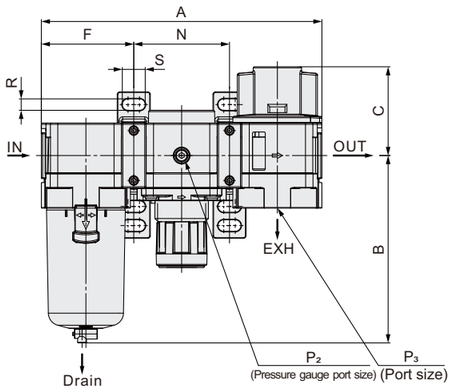

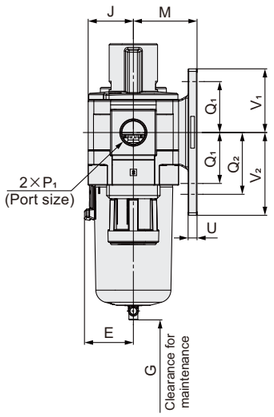

AC50B-V-D

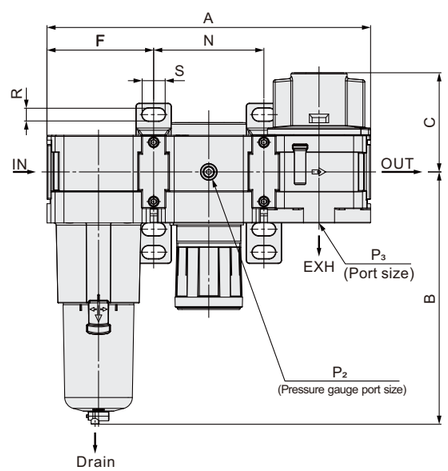

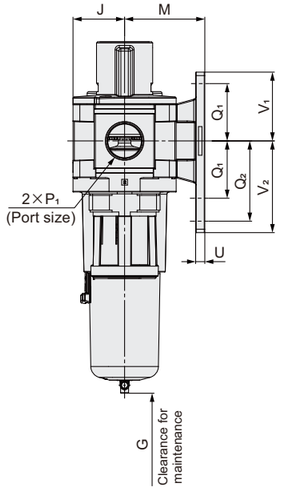

AC20B-D to AC60B-D Series Air Filter Regulator Combination

Main Dimensions

Applicable model	Optional specifications			
	Square embedded type pressure gauge	Digital pressure switch	Round type pressure gauge	Round type pressure gauge (with color zone)
AC20B-V-D to AC50B-V-D	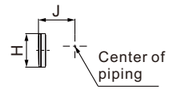	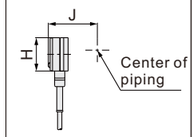	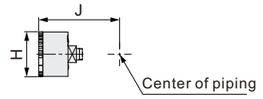	

Applicable model	Optional specifications	Semi-standard					
	With auto drain	PC/PA bowl		Metal bowl		Metal bowl with level gauge	
		Drain cock with barb fitting	With drain guide	With drain cock	With drain guide	With drain cock	With drain guide
AC20B-V-D	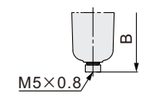		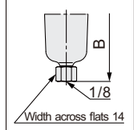		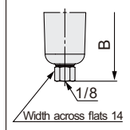		
AC30B-V-D to AC50B-V-D	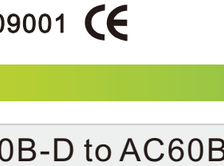						

Model	Standard specifications											Bracket mount								
	P_1	P_2	P_3	A	B	C	E	F	G	J	K	M	N	Q_1	Q_2	R	S	U	V_1	V_2
AC20B-V-D	1/8, 1/4	1/8	1/8	126.4	87.6	48.5	—	41.6	25	21	2	30	43.2	24	33	5.5	11.5	3.5	29	38
AC30B-V-D	1/4, 3/8	1/8	1/4	167.4	115.4	55	30	55.1	35	26.5	3.5	41	57.2	35	—	7	14	6	42.5	42.5
AC40B-V-D	1/4, 3/8, 1/2	1/8	3/8	220.4	147.1	69.7	38.4	72.6	40	35.5	—	50	75.2	40	55	9	18	7	50	65
AC40B-06-V-D	3/4	1/8	1/2	235.4	149.1	71.7	38.4	77.6	40	35.5	—	50	80.2	40	55	9	18	7	50	65
AC50B-V-D	3/4, 1	1/8	1/2	282.4	220.1	86.5	—	93.1	30	45	—	70	96.2	50	70	11	20	8	60	80

Model	Optional specifications											Semi-standard specifications					
	Square embedded type pressure gauge		Digital pressure switch		Round type pressure gauge		Round type pressure gauge (Semi-standard: Z)		Round type pressure gauge (with color zone)		With auto drain	PC/PA bowl		Metal bowl		Metal bowl with level gauge	
												With barb fitting	With drain guide	With drain cock	With drain guide	With drain cock	With drain guide
	H	J	H	J	H	J	H	J	H	J	B	B	B	B	B	B	B
AC20B-V-D	□28	27	□27.8	37.5	Φ37.5	57.5	Φ37.5	58.5	Φ37.5	58.5	104.9	—	91.4	87.4	93.9	—	—
AC30B-V-D	□28	32.5	□27.8	43	Φ37.5	63	Φ37.5	64	Φ37.5	64	157.1	123.9	122.2	117.8	122.3	137.8	142.3
AC40B-V-D	□28	41.5	□27.8	52	Φ42.5	73	Φ42.5	73	Φ42.5	73	186.9	155.6	153.9	149.5	154	169.5	174
AC40B-06-V-D	□28	41.5	□27.8	52	Φ42.5	73	Φ42.5	73	Φ42.5	73	188.9	157.6	155.9	151.5	156	171.5	176
AC50B-V-D	□28	51	□27.8	61.5	Φ42.5	82.5	Φ42.5	82.5	Φ42.5	82.5	259.9	228.6	226.9	222.5	227	242.5	247

AC20B-D to AC60B-D Series Air Filter Regulator Combination

Main Dimensions With Pressure Relief 3-Port Valve (V1)

AC20B-V1-D

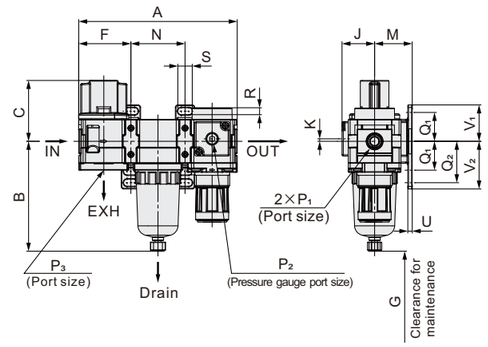

AC30B-V1-D

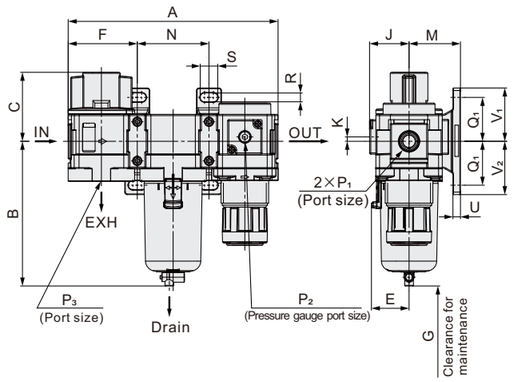

AC40B-V1-D to AC40B-06-V1-D

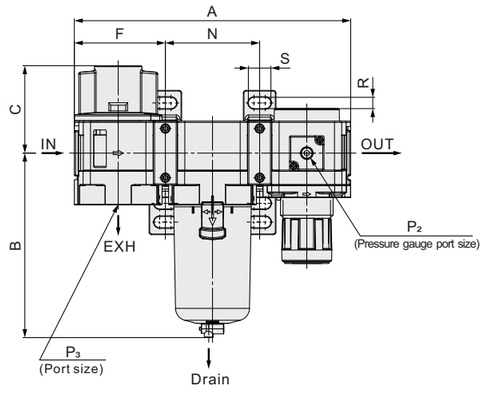

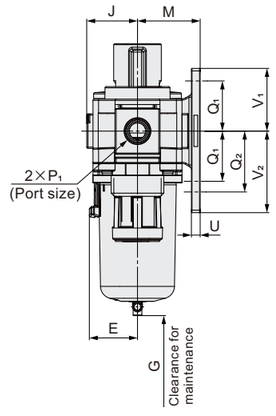

AC50B-V1-D

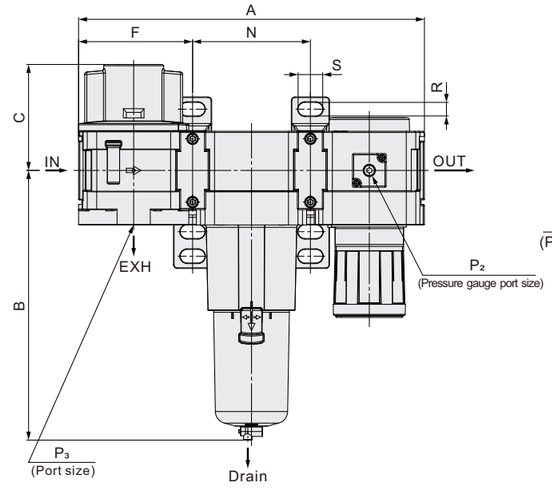

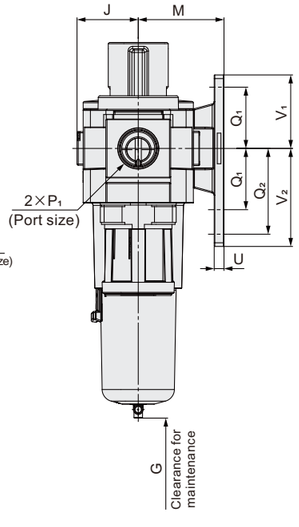

IS09001 CE
VPC PNEUMATIC®

AC20B-D to AC60B-D Series Air Filter Regulator Combination

Main Dimensions

Applicable model	Optional specifications			
	Square embedded type pressure gauge	Digital pressure switch	Round type pressure gauge	Round type pressure gauge (with color zone)
AC20B-V1-D to AC50B-V1-D	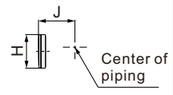	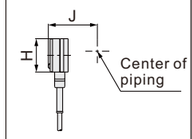	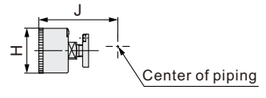	

Applicable model	Optional specifications	Semi-standard					
	With auto drain	PC/PA bowl		Metal bowl		Metal bowl with level gauge	
		Drain cock with barb fitting	With drain guide	With drain cock	With drain guide	With drain cock	With drain guide
AC20B-V1-D	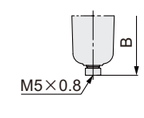		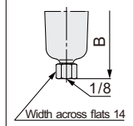	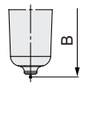	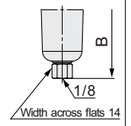		
AC30B-V1-D to AC50B-V1-D	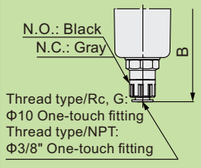	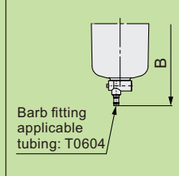	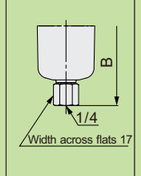	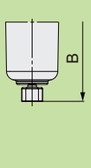	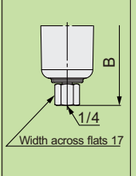	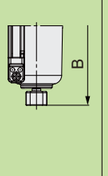	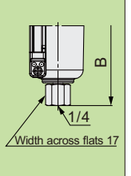

Model	Standard specifications											Bracket mount								
	P1	P2	P3	A	B	C	E	F	G	J	K	M	N	Q1	Q2	R	S	U	V1	V2
AC20B-V1-D	1/8, 1/4	1/8	1/8	126.4	87.6	48.5	—	41.6	25	26	2	30	43.2	24	33	5.5	11.5	3.5	29	38
AC30B-V1-D	1/4, 3/8	1/8	1/4	167.4	115.4	55	30	55.1	35	31.5	3.5	41	57.2	35	—	7	14	6	42.5	42.5
AC40B-V1-D	1/4, 3/8, 1/2	1/8	3/8	220.4	147.1	69.7	38.4	72.6	40	40.5	—	50	75.2	40	55	9	18	7	50	65
AC40B-06-V1-D	3/4	1/8	1/2	235.4	149.1	71.7	38.4	77.6	40	40.5	—	50	80.2	40	55	9	18	7	50	65
AC50B-V1-D	3/4, 1	1/8	1/2	282.4	220.1	86.5	—	93.1	30	50	—	70	96.2	50	70	11	20	8	60	80

Model	Optional specifications											Semi-standard specifications					
	Square embedded type pressure gauge		Digital pressure switch		Round type pressure gauge		Round type pressure gauge (Semi-standard: Z)		Round type pressure gauge (with color zone)		With auto drain	PC/PA bowl		Metal bowl		Metal bowl with level gauge	
												With barb fitting	With drain guide	With drain cock	With drain guide	With drain cock	With drain guide
	H	J	H	J	H	J	H	J	H	J	B	B	B	B	B	B	B
AC20B-V1-D	□28	27	□27.8	37.5	Φ37.5	62.5	Φ37.5	63.5	Φ37.5	63.5	104.9	—	91.4	87.4	93.9	—	—
AC30B-V1-D	□28	32.5	□27.8	43	Φ37.5	68	Φ37.5	69	Φ37.5	69	157.1	123.9	122.2	117.8	122.3	137.8	142.3
AC40B-V1-D	□28	41.5	□27.8	52	Φ42.5	78	Φ42.5	78	Φ42.5	78	186.9	155.6	153.9	149.5	154	169.5	174
AC40B-06-V1-D	□28	41.5	□27.8	52	Φ42.5	73	Φ42.5	73	Φ42.5	73	188.9	157.6	155.9	151.5	156	171.5	176
AC50B-V1-D	□28	51	□27.8	61.5	Φ42.5	82.5	Φ42.5	82.5	Φ42.5	82.5	259.9	228.6	226.9	222.5	227	242.5	247